REV.	DESCRIPTION OF REVISIONS	APPR.	DRAW.	RELEASE	DATE
X1					
X2					

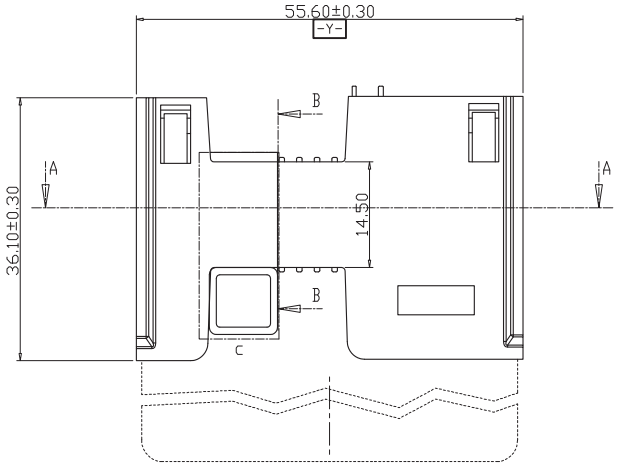

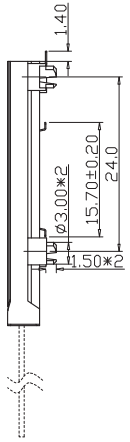

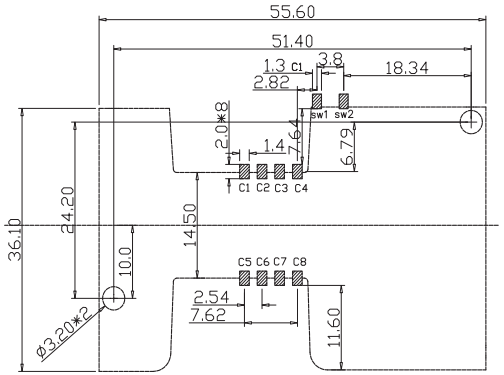

RECOMME DED P.C.B LAYOUT
COMPONENT SIDE(TOLERANCE ±0.05)

TECHNICAL CHARACTERISTICS

1.General Characteristics

Dimensions: 55.60LX36.20WX5.60H mm

Weight: Approx6.0±0.5g

Durability: 100,000 cycles min.

2.Electrical Characteristics

Contact resistance: 50mΩ typical,100mΩ max

Insulation resistance: >1000MΩ/500V DC

3.Solderability

Vaporphase: 215°C.30Sec.Max

IR reflow: 250°C.5Sec.Max

Manual soldering: 370°C,3sec.Max

4.Environmental Characteristics

Operating temperature: −40°C~+85°C

Operating humidity: 10%~+95%RH

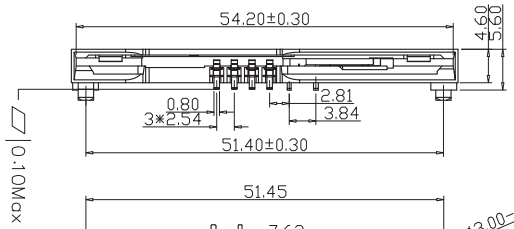

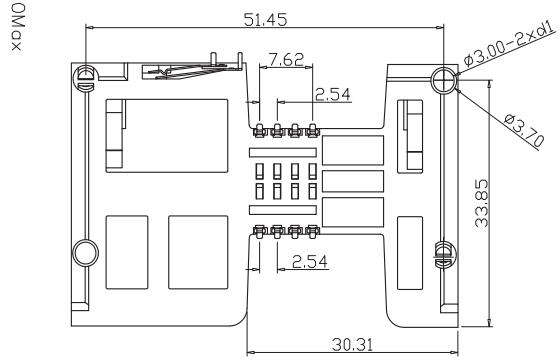

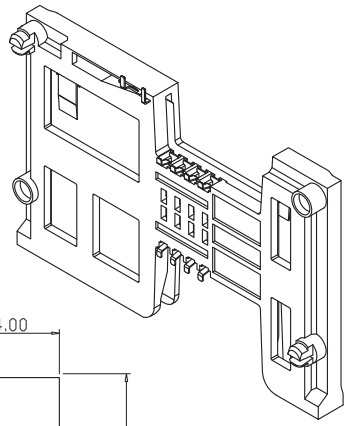

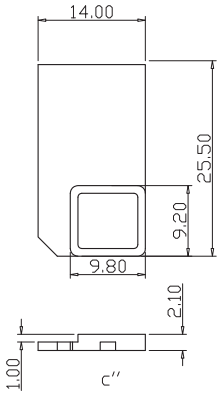

ELECTRIC FUNCTION	DETECT SWITCH
WITHOUT CARD	OPEN
CARD INSERTED	CLOSED

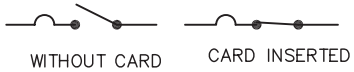

SWITCH OPERATION DIAGRAM

ITEM	PART NAME	Q'TY	MATERIAL	FINISH
1	BASE	1	Hi−temp. Thermoplastic	Black UL94V−0
2	DATA CONTACT	8	Copper Alloy	Contact area:Gold plated
3	SWITCH CONTACT 2	1	Copper Alloy	Contact area:Gold plated
4	SWITCH CONTACT 1	1	Copper Alloy	Contact area:Gold plated

Unless otherwise specified, other tolerance are:

X	±0.35	X°	±5°
X.X	±0.25	X.X°	±4°
X.XX	±0.15	X.XX°	±3°
X.XXX	±0.10	X.XXX°	±2°

PROJ. | UNIT mm | SCALE 1:1

CUSTOMER DRAWING

Wellco T&C Co., Ltd.

NAME: **Smart Card Acceptor**

MODEL NO: C8292

TYPE : **Normally open (Blade SW)**

DRAWN	Zoey	Nov.11.2009
CHECKED	Keey	Nov.11.2009
APPROVAL	Simon	Nov.11.2009

DWG NO.: DWG− C829−001

SHEET 1/1 | REVISION X1

Pb RoHS PROCESS COMPLIANT