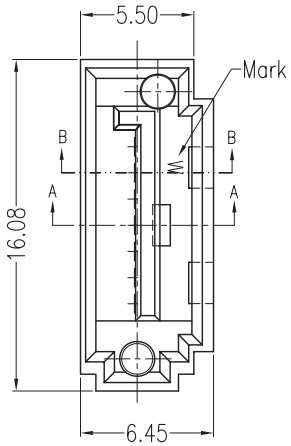

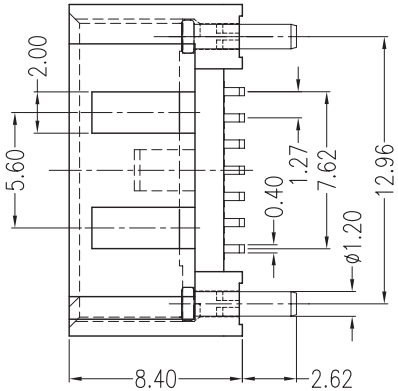

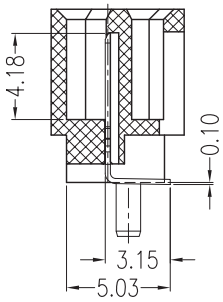

SECT B-B

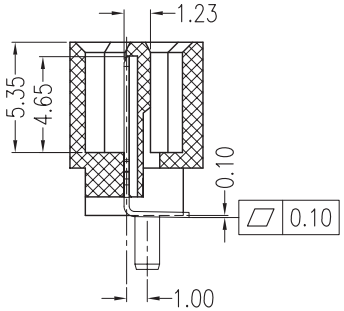

SECT A-A

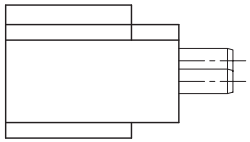

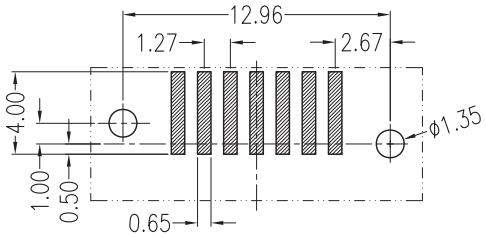

PCB LAYOUT
(T=1.60mm)

NOTES:

*Material

Housing: Nylon46, UL 94V-0 rated.
Contact: Brass;
Plating: Gold Plating Over Nickel on Contact Area; Tin Plating on Solder Tail.

*Mechanical

Insertion Force: 45N Max.
Withdrawal Force: 10N Min.
Durability: 500 Cycles.

*Electrical Specification

Current Rating: 1.5 Ampere per contact;
Contact Resistance: 30 Milliohms max.
Insulation Resistance: 1000 megohms min.
Dielectric Withstanding Voltage: 500 V AC.

*Environmental

Operating Temperature: -55°C to +125°C.

*How to Order

WATF-07 D B N4 B B 1 U W

- W: Blank:Black 4:Blue
- U: Blank:No Mark
- 1: U:Lead Free Blank:Sn Pb
- B: 1:Rounded Copper Pole
- B: B:Shield (Double Holes)
- B: B:Straight SMT B TYPE
- N4: N4:Nylon46
- D: B:Brass
- B: Gold A:Flash B:5u" C:10u" D:15u"
- 07: NO. of Contacts
- WATF: Serial ATA for Mother

REV					
Units mm	Scale	Drawing By Jerry	Data	Wellco T&C Co., Ltd.	
Tolerance Unless Otherwise Specified		Reviewed By Roger	Data	Date	Title: SATA 7P Straight DIP B Type Shield Rounded Copper Pole(Through Type) Male
.X ~ ±0.38		Approval By Tf	Data	Sheet 1 of 1	
.XXX ~ ±0.25				Third Angle Projection	
.XXX ~ ±0.20				Drawing No.	REV
Angle ~ ± 3°					