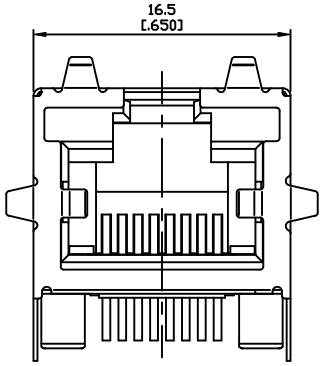

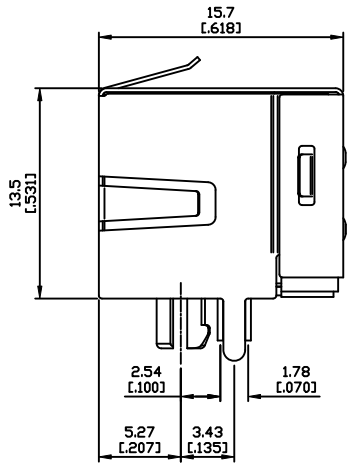

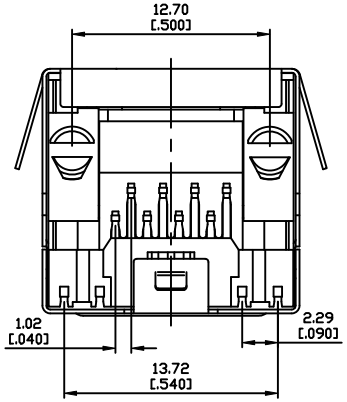

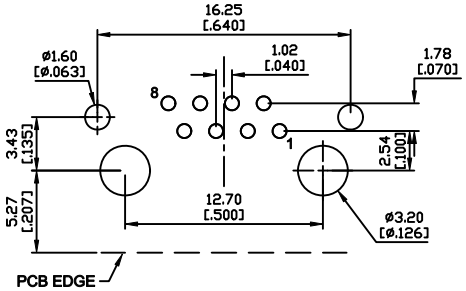

RECOMMENDED PCB LAYOUT
TOP VIEW

Electrical Characteristics :
Insulation Resistance : 500MΩ Min.
Contact Resistance : 50mΩ Max.
Withstand Voltage : 1000 VAC 1 minute.
Current Rating : 1.5A

Material:
Housing: Thermoplastic UL 94V-0
Contact : Selective Gold Plating
Terminal: 0.35mm Thickness Phosphor Bronze
Plated With Gold And Tin In Solder Area.
Shielded: Brass ,Nickel Plating
CUL File No : E215573

PART NO : 8 1 8 8 D S - B ∗ 1 0 - 0

- Positions
- Contacts
- Panel Ground
  S : 3 Side With Panel Ground
- Housing Color
  B : Black
- Ports
- Gold Plated
  0 : Gold Flash
  1 : 6u"
  2 : 15u"
  3 : 30u"
  4 : 50u"

Wellco T&C Co., Ltd.

ZONE	REV.	DESCRIPTION	DATE	APPD.
Ⓐ				
Ⓑ				
Ⓒ				
Ⓓ				
Ⓔ				

FILE NO : 81 (SERIES)

TOLERANCE (公差) :
0.000 mm ± 0.075mm
0.00 mm ± 0.15mm
0.0 mm ± 0.25mm

TITLE 圖 名	RJ45,Shielded,Receptacle Horizontal,1 Port,THT			UNIT 單位	mm inch
PART NO. 料 號	8188DS-B∗10-0			SCALE 比 例	1 : 1
REV. 版 本	A.0	DATE 日 期	2009-09-25		
CHECKED BY 審 核	Aaron		DRAWN BY 製 圖	Eric	