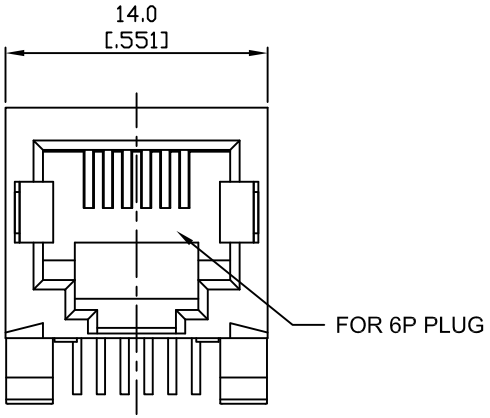

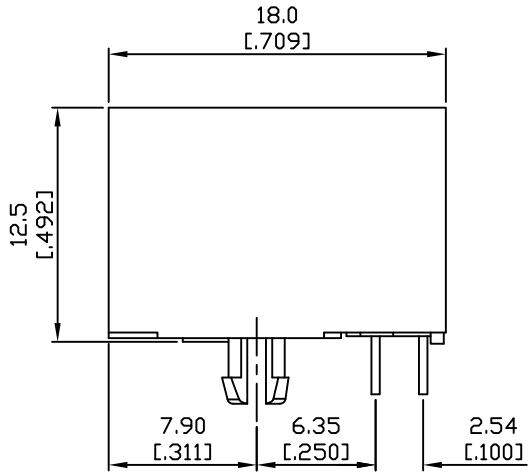

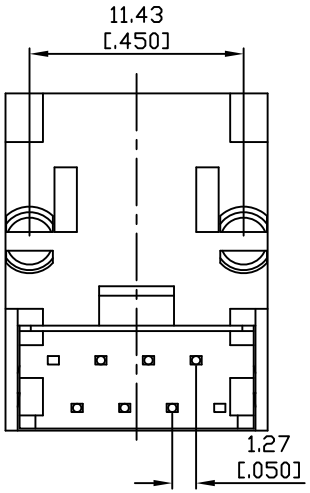

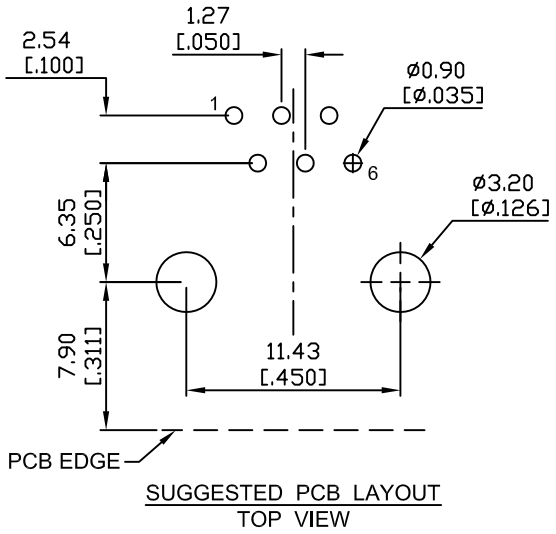

SUGGESTED PCB LAYOUT
TOP VIEW

Electrical Characteristics :
- Insulation Resistance : 500MΩ Min.
- Contact Resistance : 30mΩ Max.
- Withstand Voltage : 500 VAC 1 minute.
- Current Rating : 1.5A

Material:
Housing : Thermoplastic UL94V-0
Contact : Full Gold Plating
Spring Wire : Dia 0.45mm Phosphor Bronze
Optional Gold Plating Over Nickel
CUL File No : E215573

PART NO : 8 3 8 6 A - B ∗ 1 S

- Positions: 8
- Contacts: 6
- Housing Color: B : Black
- Gold Plated: ∗ — 0 : 3u"±1u" / 1 : 6u"±1u" / 2 : 15u"±5% / 3 : 30u"±5% / 4 : 50u"±5%
- Ports: 1
- For RJ11: S

Wellco T&C Co., Ltd.

ZONE	REV.	DESCRIPTION	DATE	APPD.
Ⓐ				
Ⓑ				
Ⓒ				
Ⓓ				
Ⓔ				

FILE NO : 83 (SERIES)

TOLERANCE(公差) :
0.000 mm ± 0.075 mm
0.00 mm ± 0.15 mm
0.0 mm ± 0.25 mm

TITLE 圖 名	RJ11 SIDE ENTRY PCB JACK		UNIT 單位	mm inch
PART NO. 料 號	8386A-B∗1S		SCALE 比 例	1 : 1
REV. 版本	A.0	DATE 日 期 2007-07-17		
CHECKED BY 審 核	Michael	DRAWN BY 製 圖	Valiant	

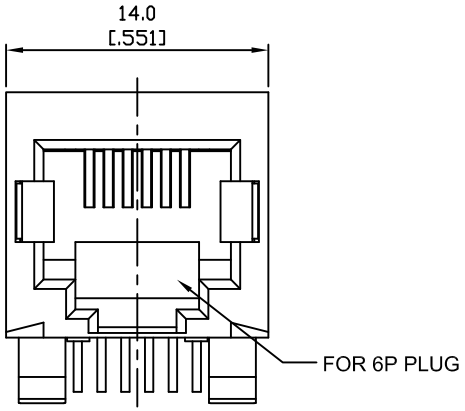

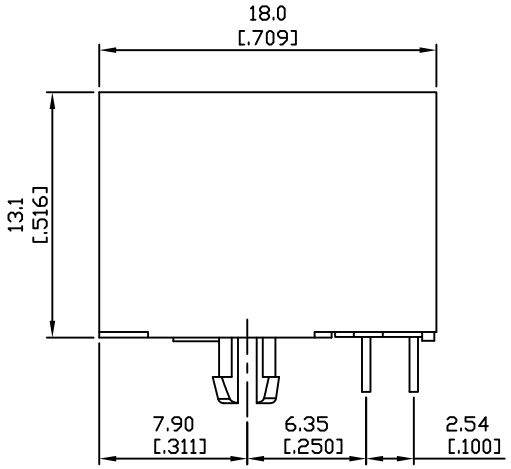

Electrical Characteristics :

- Insulation Resistance : 500MΩ Min.
- Contact Resistance : 30mΩ Max.
- Withstand Voltage : 500 VAC 1 minute.
- Current Rating : 1.5A

Material:
Housing : Thermoplastic UL94V-0
Contact : Full Gold Plating
Spring Wire : Dia 0.45mm Phosphor Bronze
Optional Gold Plating Over Nickel
CUL File No : E215573

PART NO : 8 3 8 6 B - B ∗ 1 S

- Positions
- Contacts
- Housing Color B : Black
- For RJ11 Ports
- Gold Plated
  - 0 : 3u"±1u"
  - 1 : 6u"±1u"
  - 2 : 15u"± 5%
  - 3 : 30u"± 5%
  - 4 : 50u"± 5%

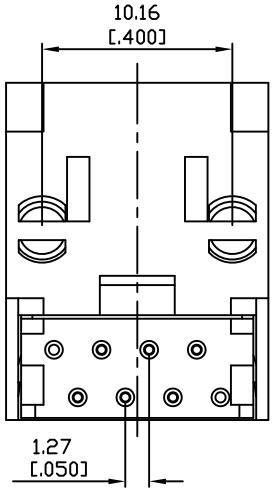

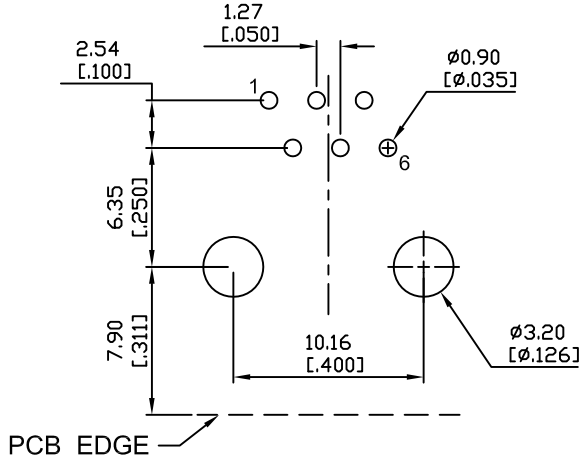

SUGGESTED PCB LAYOUT
TOP VIEW

Wellco T&C Co., Ltd.

ZONE	REV.	DESCRIPTION	DATE	APPD.
Ⓐ				
Ⓑ				
Ⓒ				
Ⓓ				
Ⓔ				

FILE NO : 83 (SERIES)

TOLERANCE(公差) :
0.000 mm ± 0.075 mm
0.00 mm ± 0.15 mm
0.0 mm ± 0.25 mm

TITLE 圖 名	NON-SHIELDED RJ11 SIDE ENTRY PCB JACK			UNIT 單位	mm inch
PART NO. 料 號	8386B-B∗1S			SCALE 比 例	1 : 1
REV. 版本	A.0	DATE 日 期	2007-06-14		
CHECKED BY 審 核	Michael		DRAWN BY 製 圖	Valiant	

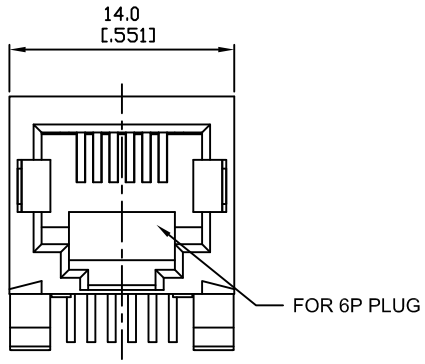

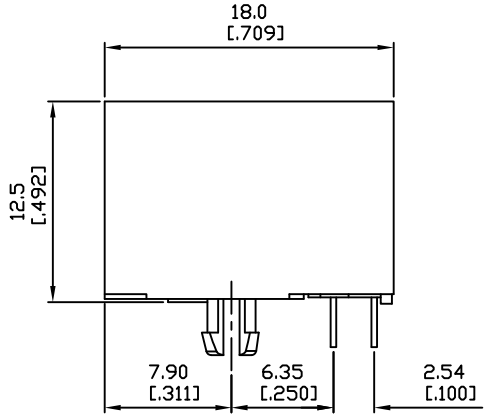

Electrical Characteristics :

- Insulation Resistance : 500MΩ Min.
- Contact Resistance : 50mΩ Max.
- Withstand Voltage : 500 VAC 1 minute.
- Current Rating : 1.5A

Material:
Housing: Thermoplastic UL 94V-0
Contact : Selective Gold Plating
Terminal: 0.35mm Thickness Phosphor Bronze Plated With Gold And Tin In Solder Area.
CUL File No : E215573

PART NO : 8 3 8 6 C - B ∗ 1 S

- Positions
- Contacts
- Housing Color
  B : Black
- Gold Plated
  0 : 3u"±1u"
  1 : 6u"±1u"
  2 : 15u"± 5%
  3 : 30u"± 5%
  4 : 50u"± 5%
- Ports
- For RJ11

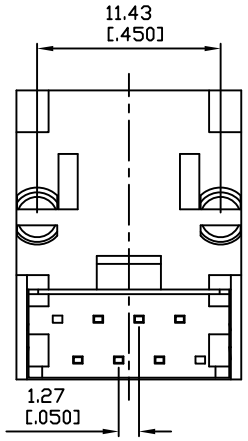

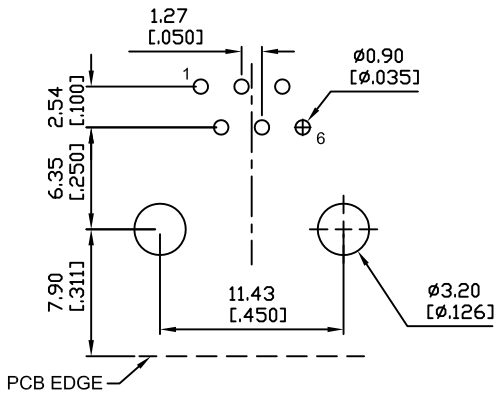

SUGGESTED PCB LAYOUT
TOP VIEW

Wellco T&C Co., Ltd.

ZONE	REV.	DESCRIPTION	DATE	APPD.
Ⓐ				
Ⓑ				
Ⓒ				
Ⓓ				
Ⓔ				

FILE NO : 83 (SERIES)

TOLERANCE(公差) :
0.000 mm ± 0.075 mm
0.00 mm ± 0.15 mm
0.0 mm ± 0.25 mm

TITLE 圖 名	NON-SHIELDED RJ11 SIDE ENTRY PCB JACK			UNIT 單位	mm inch
PART NO. 料 號	8386C-B∗1S			SCALE 比 例	1 : 1
REV. 版本	A.0	DATE 日 期	2007-07-17		
CHECKED BY 審 核	Michael	DRAWN BY 製 圖	Valiant		