正

Wellco T&C Co., Ltd. 威耳國際企業有限公司

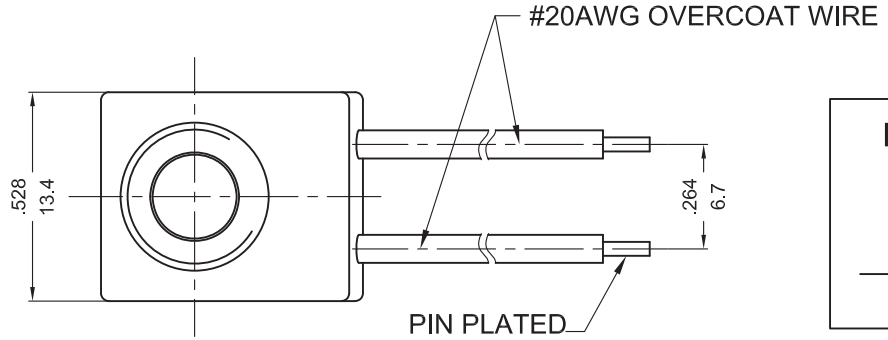

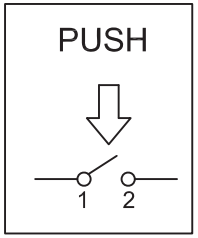

PUSH SWITCH MODEL PS-18 SERIES

WITHS TAND VOLTAGE:1000VAC FOR 1 MINUTE
INSULATION RESISTANCE:100MΩ(MIN),DC500V
CONTACT RESISTANCE:50mΩ(MAX)
RATING DC12V 1mA

Life :
mechanical 2,000,000 times
electrical 50,000 times

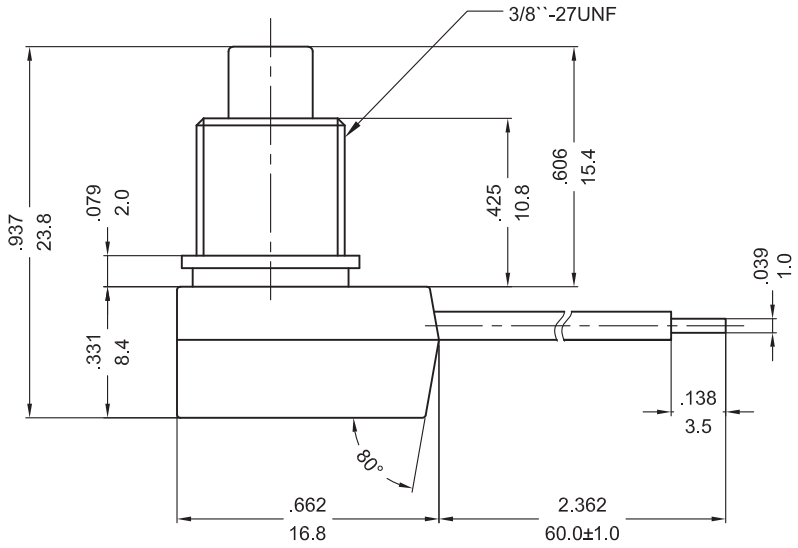

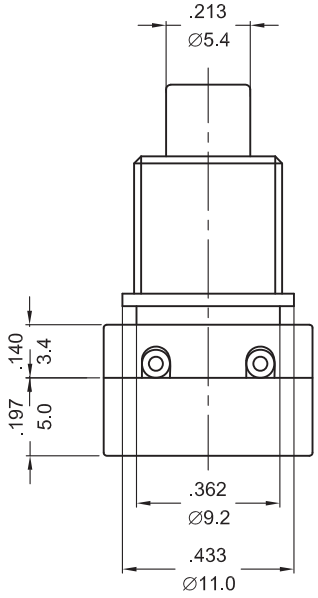

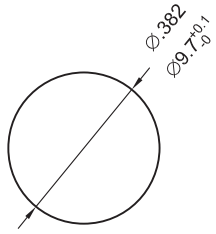

MOUNTING HOLE

NOTE:TOLERANCES UTLESS OTHERWISE SPECIFIED:± .012/0.3 (in/mm)

REVISION	DESCRIPTION	REVISED BY	TOLERANCES				ANGLE ½°	UNIT	mm	PART NAME	PS18 SPEC DRAWING	DWG NO
8			DRAWN BY	達志各	DESIGNED BY	蔡劍	SCALE	2/1				
7 2012.11.29	整理圖面，重新出圖	達志各										
6 2009.02.16	依實物修正圖面，重新出圖	彭海華	CHECKED BY		APPROVED BY		DATE	2003.03.20		PART NO	PS18-2-NNA	
5 2006.03.15	修改料號,增加環保說明	孫斌										