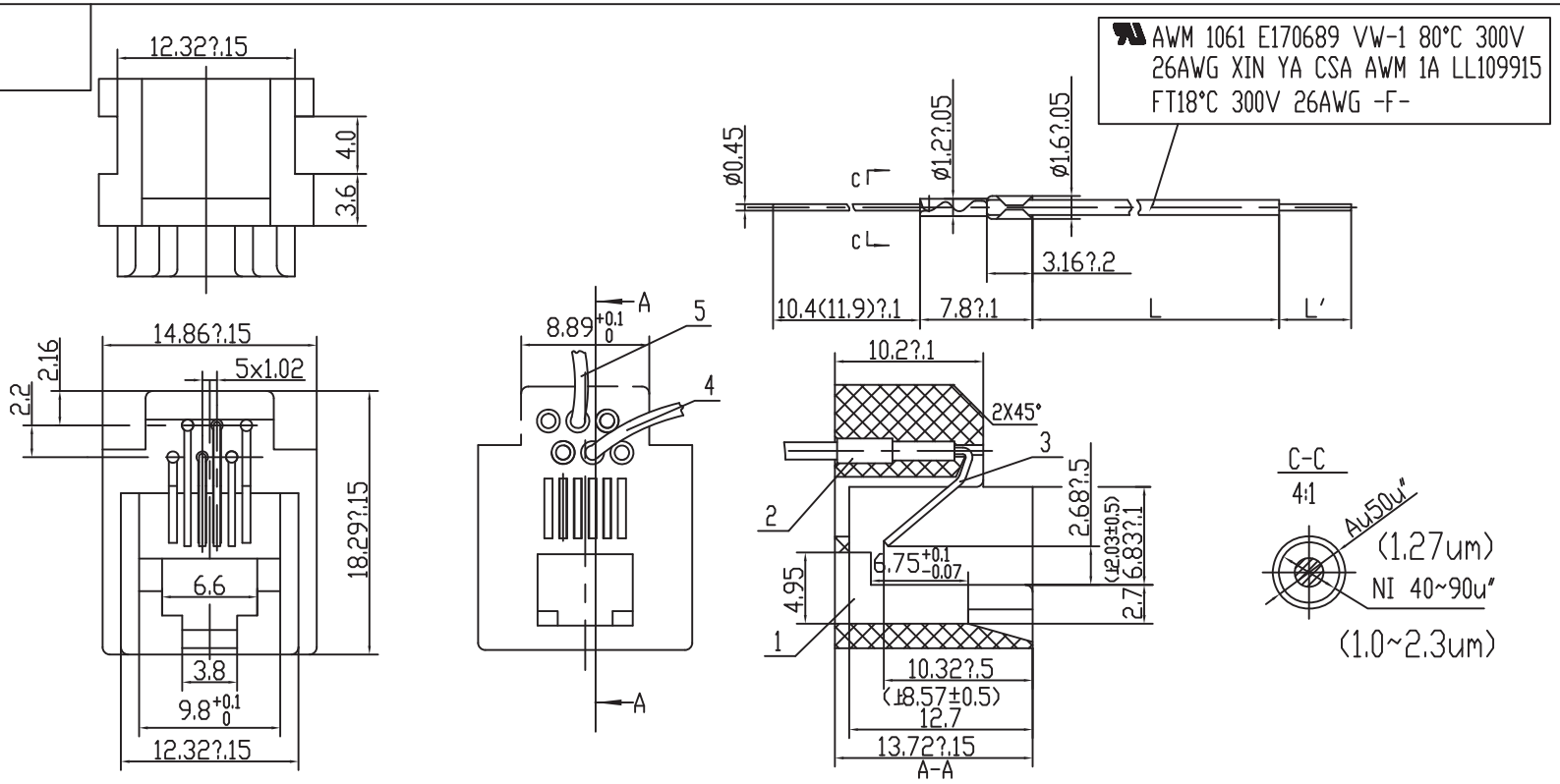

NO.	MATERIAL	COLOUR	UL.ST.	AWG	STR	L	L'
5	PVC	BROWN	1061	AWG26	7/0.15	60±3	5±0.5mm TIN
4	PVC	YELLOW	1061	AWG26	7/0.15	60±3	5±0.5mm TIN
3	PHOSPHOR BRONE						
2	COPPER ALLOY						
1	ABS	GRAY	UL94V-0				

Specification

1. Wire sequence and wire color lenth can do according to with customer's requirements
2. Use "UL" wire
3. No special requirement dimension tolerance:±0.15mm

Enrol	
Tracing	
Tracing	
Signing	
Date	

Design		Criterion	
Collate		Examine	
Examine		Approval	
Technics		Date	

623K-6P2C-60mm

PQJJ1T039LA-ZV

Drawing Marking	Weight	Scale

Common Page | Page

Wellco T&C Co., Ltd.